Rev	Description	Date	By
1	Initial Release	10/15/2021	TMW

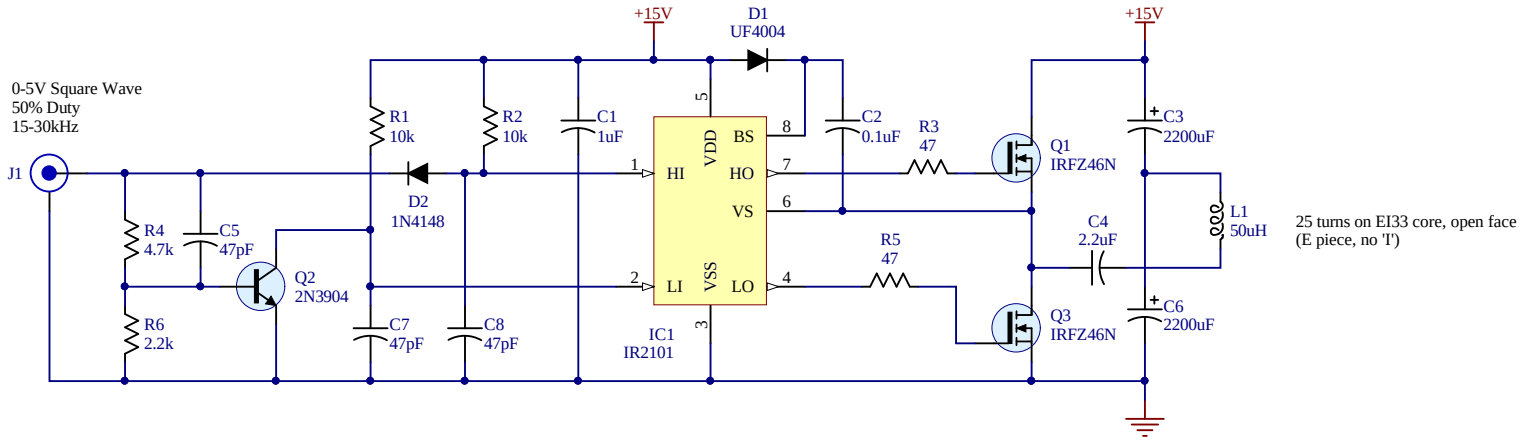

Seven Transistor Laboratories, LLC

Title
Induction Test

For
Internal

Drawn By	TMW	Date	10/15/2021	Size	A	Sheet	1	of	1

Project Folder Doodles